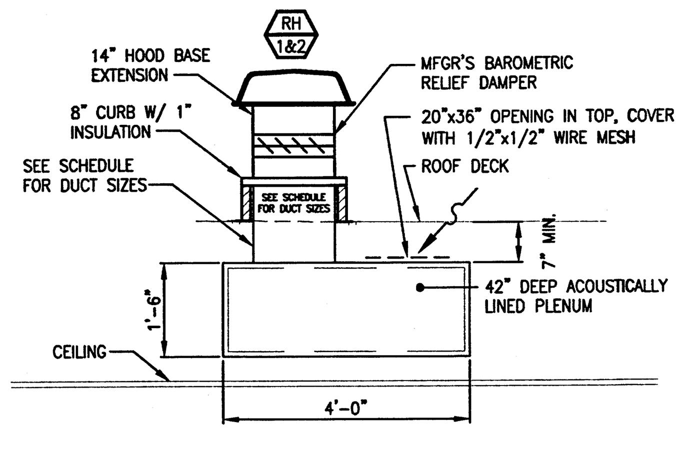

5 / M2.0 **RELIEF HOOD / AIR TRAP DETAIL**
SCALE: 1/2" = 1'-0"

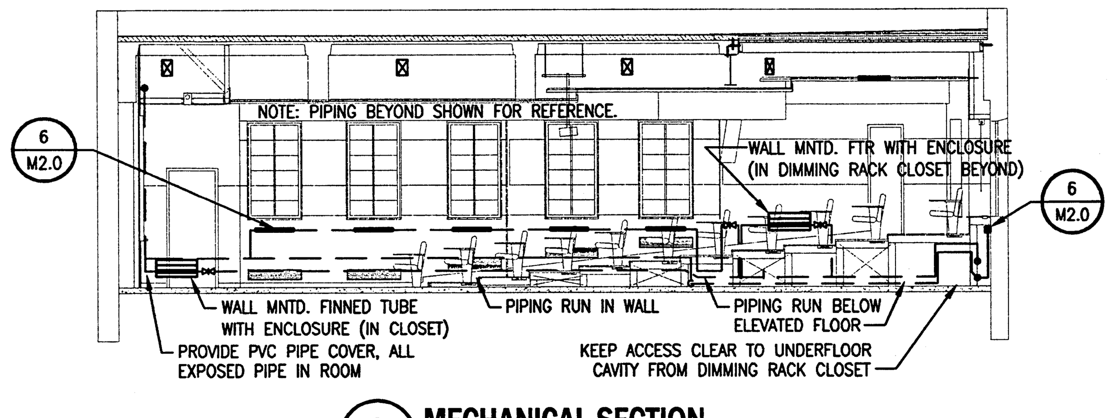

2 / M2.0 **MECHANICAL SECTION**
SCALE: 1/8" = 1'-0"

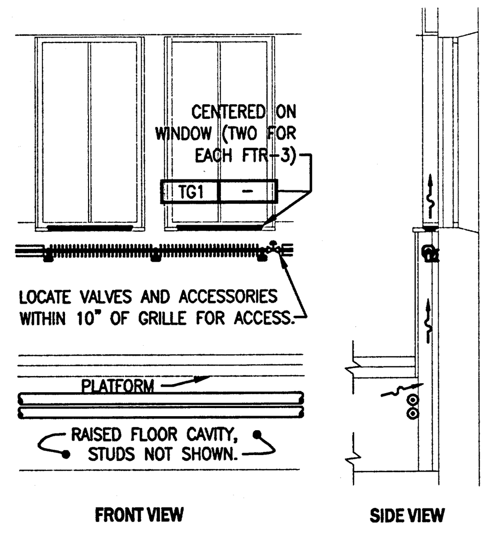

NOTE: COORDINATE FRAMING FOR 36" MIN. WIDTH AIR PATH & FTR BEHIND WALL WITH ARCH. TRADES. PROVIDE OPENING THROUGH PLATFORM AT WALL, AREA EQUIV. TO TRANSFER GRILLE.

6 / M2.0 **FTR MOUNTING DETAIL, SOUTH WALL**
SCALE: NONE

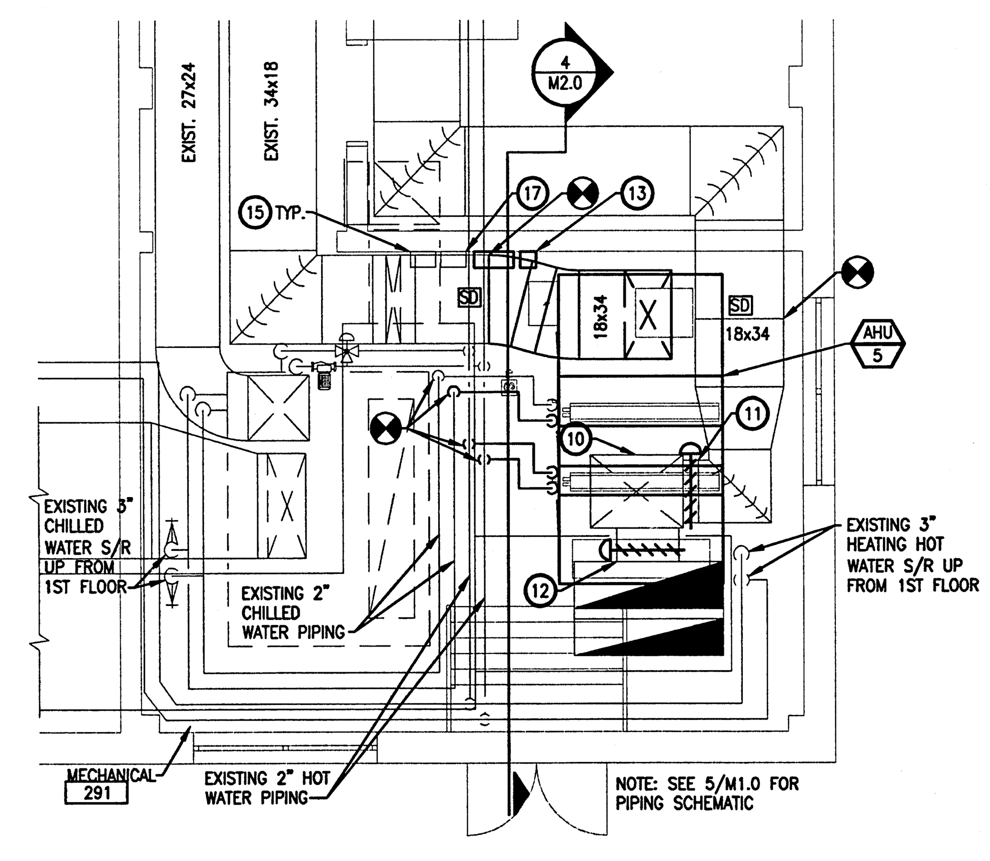

3 / M2.0 **ENLARGED MECHANICAL FLOOR PLAN**
SCALE: 1/4" = 1'-0"

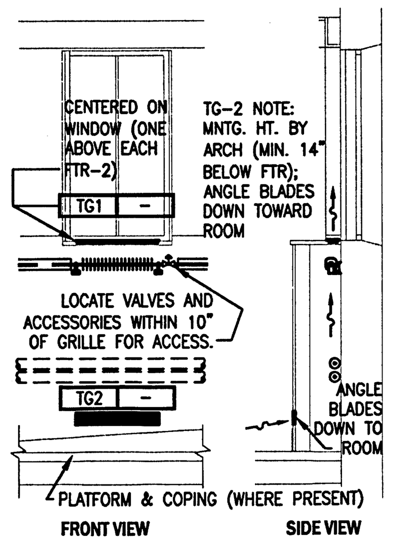

NOTE: COORDINATE FRAMING FOR 36" MIN. WIDTH AIR PATH & FTR BEHIND WALL WITH ARCH. TRADES. SEE ARCH. FOR TG2 LOC.

7 / M2.0 **FTR MOUNTING DETAIL, EAST WALL**
SCALE: NONE

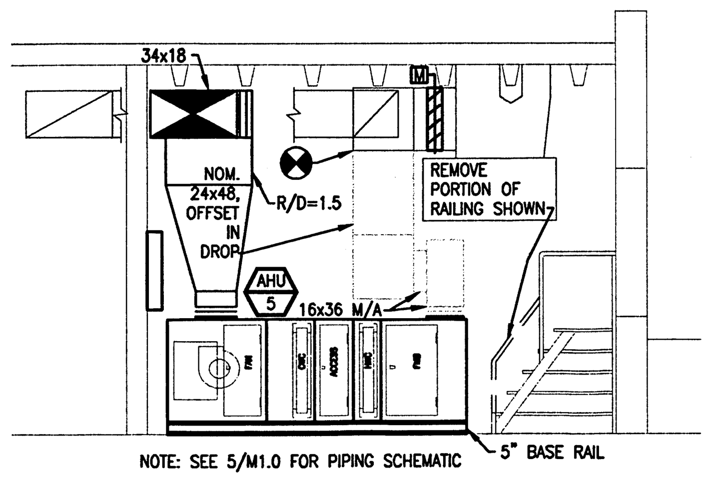

4 / M2.0 **AHU-5 ELEVATION**
SCALE: 1/4" = 1'-0"

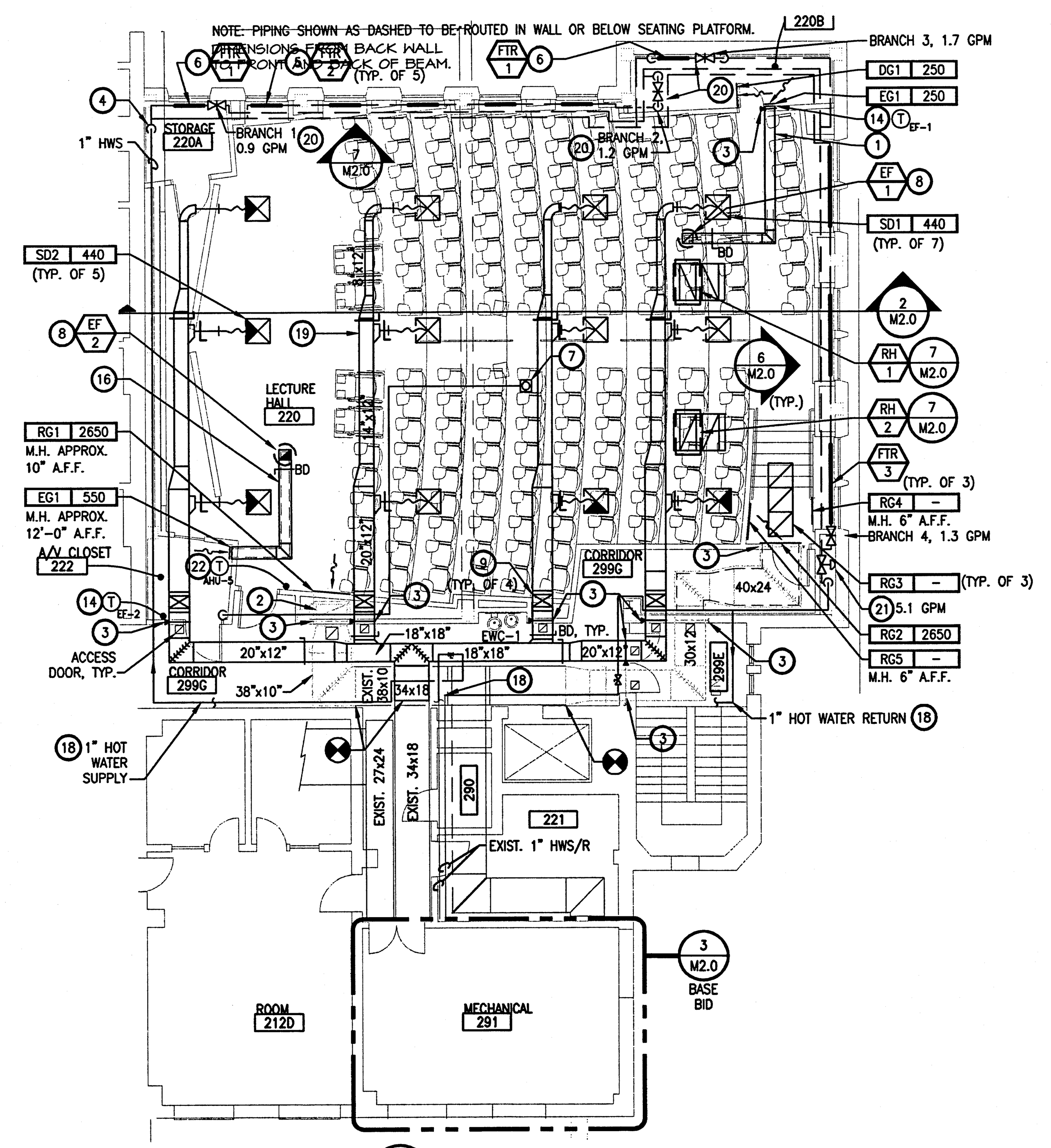

1 / M2.0 **MECHANICAL FLOOR PLAN**
SCALE: 1/8" = 1'-0"

GENERAL NOTES:

- IN THE BASE BID, EXISTING AHU-5 PNEUMATIC CONTROLS ARE TO BE RE-USED. IN THE ALT. #1, NEW DDC CONTROLS ARE TO BE PROVIDED. SEE SECTION 15900 FOR ADDITIONAL INFORMATION.

PLAN NOTES:

1. 10"x6" EXHAUST DUCT, ROUTE FROM SIDEWALL GRILLE UP TO EF ON ROOF AS SHOWN. INTERNALLY LINE FIRST 15' OF DUCT FROM EF. INSTALL BALANCE DAMPER AND BALANCE TO 250 CFM.
2. ROUTE 32"x12" R/A DUCT UNDER BEAM, DROP INTO CHASE WITH ACOUSTICALLY LINED 32x12 DUCT, TRANSITION IN DROP TO 36"x15" LINED PLENUM.
3. INSTALL FIRE DAMPER AT RATED WALLS WHERE SHOWN.
4. DROP OR RISE PIPE AT WALL FROM CEILING. PROVIDE PVC PIPE COVER FOR ALL EXPOSED PIPING WITHIN 8' OF FLOOR.
5. TYPICAL AT EAST WINDOWS: MOUNT FINNED TUBE IN WALL CAVITY AS DETAILED. ROUTE PIPING IN WALL. ALL PIPING ACCESSORIES (MANUAL BALANCE VALVES, AIR VENTS, ETC.) SHALL BE ACCESSIBLE FROM REMOVABLE GRILLE MOUNTED IN WINDOW SILL.
6. MOUNT FTR APPROX. 12" A.F.F. ROUTE PIPING ALONG WALL. FTR ENCLOSURE REQUIRED. PROVIDE PVC PIPE COVER FOR ALL EXPOSED PIPE BELOW 8' A.F.F.
7. INSTALL NEW ROOF DRAIN AND ROOF DRAIN LEADER. CONNECT TO EXISTING STORM DRAIN PIPE AT FLOOR LEVEL NEAR COLUMN. EQUIV. TO J.R. SMITH FIG. 1015-R-C, CAST IRON.
8. PROVIDE LINE VOLTAGE THERMOSTAT (EF-1, EF-2) BY SHEET METAL CONTRACTOR. MOUNT THERMOSTAT AT NOM. 5'-0" A.F.F. AT LOCATION SHOWN. ACOUSTICALLY LINE FIRST 15' FROM FAN.
9. OFFSET UP IN BULKHEAD.
10. EXTERNALLY INSULATED 28"W x 28"H x 36"L MIXED AIR PLENUM.
11. 24"x24" OPPOSED BLADE R/A CONTROL DAMPERS, MOUNT TO MIXED AIR PLENUM AS CLOSE TO OUTDOOR AIR DAMPERS AS POSSIBLE. BY 15900.
12. 24"x24" OPPOSED BLADE O/A CONTROL DAMPERS BY 15900, MOUNT TO MIXED AIR PLENUM AS CLOSE TO RETURN AIR DAMPERS AS POSSIBLE. DIV. 15 TO PATCH AND RE-INSULATE EXISTING O/A PLENUM AS NEEDED.
13. NEW VFD FOR AHU-5 AND RELOCATED AHU-5 CONTROL PANEL (BASE BID) OR NEW AHU-5 DDC CONTROL PANEL (ALT. #1) AND NEW VFD.
14. WALL MOUNTED THERMOSTAT FOR EXHAUST FAN, BY SHEET METAL CONTRACTOR, WIRED BY DIV. 16.
15. DO NOT LOCATE WALL HUNG EQUIP. BY DOOR TO MECH. ROOM (EAST WALL.) DOOR MUST BE CAPABLE OF SWINGING OPEN 180 DEG.
16. 12"x10" EXHAUST DUCT, ROUTE FROM SIDEWALL GRILLE UP TO EF ON ROOF AS SHOWN. INTERNALLY LINE FIRST 15' OF DUCT FROM EF. INSTALL BALANCE DAMPER AND BALANCE TO 550 CFM.
17. AHU-4 WALL MOUNTED CONTROLS AND ELECTRICAL EQUIPMENT (DISCONNECT, STARTERS, CAPACITORS, ETC.) SHALL BE RELOCATED AS NEEDED TO MAINTAIN 36" CLEARANCE FROM NEW AHU-5 AND EXIST. AHU-4. COORDINATE WITH E.C. AND C.I.C.
18. CONNECT NEW 1" HWS/R PIPING IN CEILING SPACE TO EXISTING 1" HWS/R FROM MECHANICAL ROOM NEAR ELEVATOR, FIELD VERIFY LOCATION OF EXSITING.
19. BRANCH DUCT DIMENSIONS SHOWN ARE TYPICAL OF ALL FOUR SUPPLY AIR BRANCH DUCTS IN ROOM. USE 15 DEG. MAX TRANSITIONS.
20. MOUNT BALANCE VALVE EXPOSED IN ROOM. PROVIDE 16 GA. SHEET MATEL ENCLOSURE WITH REMOVEABLE GUARDS FOR ALL PIPING ACCESSORIES AND LABEL.
21. MOUNT PERIMETER RADIATION CONTROL VALVE IN WALL AT STEPS. PROVIDE 16"x16" ACCESS PANEL (AT STEPS).
22. BASE BID: REINSTALL WALL MOUNTED ROOM THERMOSTAT AND WALL MOUNTED ROOM TEMPERATURE SENSOR. ALT#1: INSTALL NEW DDC ROOM TEMPERATURE SENSOR.

RELIEF HOOD SCHEDULE

TAG	CFM	MAX STATIC (IN W.G.)	MIN. THROAT DIMS.	MIN. THROAT AREA	MFG.	MODEL	REMARKS
RH-1 & RH-2	2,400	0.050	16"x36	4.0 SQ.FT.	GREENHECK	FABRAHOOD	PROVIDE WITH 1/2" BIRDSCREEN AND BARoMETRIC RELIEF DAMPER

FIXTURE SCHEDULE

MARK	MFG'R/MODEL	TRIM	C/W	WASTE	VENT	MNTG. HT.	REMARKS
EWC-1	OASIS M8CR OR HAWS #HWBFA8L	RADII MODULAR SPLIT-LEVEL ELECRIC WATER COOLER. 8 GPH, 1/4 HP COMPRESSOR, 4.6 FLA, 115 VAC; ALL S/S; P-TRAP, 1/2"x3/8" STRAIGHT SUPPLYSTOP W/ RISER.	1/2"	1 1/4"	1 1/4"	43" TO BUBBLER STD. 36" TO BUBBLER ADA COMPLIANT	INSTALL PER MFG'RS INSTRUCTIONS

DIFFUSER, REGISTER AND GRILLE SCHEDULE

BASIS OF DESIGN = PRICE. ALL ALUMINUM CONSTRUCTION.

MARK	NOMINAL CFM	NECK (IN.)	FACE DIM'S. W(IN.) x H(IN.)	PRES. DROP (IN. W.C.)	N.C.	THROW (FT.)	MODEL	REMARKS	MARK
SD-1	400	10"	24x24	-	22	-	PRICE ASPD	PANEL DIFFUSER, LAY-IN	SD-1
SD-2	400	10"	24x24	-	22	-	PRICE ASPD	PANEL DIFFUSER, LAY-IN, QUADRANT BLANK-OFF AS SHOWN.	SD-2
RG-1	2650	-	36x40	-	22	-	PRICE 98 SERIES	HEAVY DUTY GYM GRILLE.	RG-1
RG-2	2650	-	40x24	-	24	-	PRICE 630 SERIES	LOUVERED SINGLE DEFLECTION	RG-2
RG-3	2000	-	24x24	-	21	-	PRICE 80 SERIES	LAY-IN EGGCRATE W/BORDER TB	RG-3
RG-4	600	-	24x16	0.03	16	-	PRICE 98 SERIES	HEAVY DUTY GYM GRILLE, 45 DEG. DEFLECTION	RG-4
RG-5	1200	-	36x20	0.04	19	-	PRICE 98 SERIES	HEAVY DUTY GYM GRILLE, 45 DEG. DEFLECTION	RG-5
DG-1	250	-	14x20	-	<17	-	PRICE ATGH	DOOR GRILLE, SIGHTPROOF HEAVY DUTY ALUM., CHANNEL BORDER	DG-1
EG-1	550	-	14x14	0.06	23	-	PRICE 630	SINGLE DEFLECTION (45 DEG.) ALUMINUM GRILLE SURFACE MOUNT, 3/4" BLADE SPACING	EG-1
TG-1	300	-	36x4	0.04	15	-	ANEMOSTAT AL1	SILL MOUNT, ZERO DEFL., BORDER FG, PENCIL PROOF.	TG-1
TG-2	330	-	36x5	0.02	10	-	ANEMOSTAT AL1	WALL MOUNT, 15 DEG. DEFL., FRAME XA, PENCIL PROOF.	TG-2

DIFFUSER, REGISTER & GRILLE SCHEDULE NOTE: COLOR SELECTION SHALL BE BY ARCHITECT, ALL SCHEDULED ITEMS.

EXHAUST FAN SCHEDULE

MARK	TYPE	SERVING	DESIGN CFM	ACTUAL CFM	S.P.	DRIVE	RPM	SONES	MOTOR VOLTS	MOTOR PHASE	MOTOR H.P.	MANUFACTURER	MODEL	REMARKS	MARK
EF-1	ROOF EXHAUSTER	DIMMING RACKS	250	308	0.5	DIRECT	1550	7.6	120	1	1/20	GREENHECK	G-085-D	(1)(2)	EF-1
EF-2	ROOF EXHAUSTER	VIDEO/AUDIO CLOSET	550	623	0.5	DIRECT	1550	9.2	120	1	1/8	GREENHECK	G-095-D	(1)(2)	EF-2

NOTES: (1) PROVIDE MFG'RS BACKDRAFT DAMPER, BIRDSCREEN AND FACTORY DISCONNECT. (2) CONTROLLED VIA WALL-MOUNTED LINE VOLT THERMOSTAT BY DIV. 15

FINNED TUBE RADIATION SCHEDULE

MARK	LENGTH	TUBE DIA.	FIN SIZE	FINS/FT.	ROWS	E.W.T (°F)	L.W.T (°F)	GPM	MIN. MBH PER L.F.	MIN. MNTG. HT. (IN.)	ENCLOSURE HT. (IN.)	MFG'R. & MODEL	REMARKS	MARK
FTR-1	2'-6"	3/4"	3-1/4 x 3-1/4	32	1	180.0	175.0	0.9	853	18	14	RITTLING HYDRO-AIR FINNED TUBE, 3/4C-3 1/4 x 3-1/4-32, ENCLOSURE FSOD.	MFG'RS CRADLE-TYPE EXPANSION BRACKET, SLOPED TOP ENCLOSURE	FTR-1
FTR-2	2'-6"	3/4"	4-1/4 x 4-1/4	32	1	180.0	160.0	1.2	950	12-1/4	-	RITTLING HYDRO-AIR FINNED TUBE, 3/4C-4 1/4 x 4-1/4-32, NO ENCLOSURE.	MFG'RS CRADLE-TYPE EXPANSION BRACKET	FTR-2
FTR-3	6'-0"	3/4"	3-1/4 x 3-1/4	40	1	180.0	160.0	1.3	730	11-1/4	-	RITTLING HYDRO-AIR FINNED TUBE, 3/4C-4 1/4 x 4-1/4-32, NO ENCLOSURE.	MFG'RS CRADLE-TYPE EXPANSION BRACKET	FTR-3

NOTES:
1. CONTRACTOR RESPONSIBLE FOR FINAL DIMENSIONS INCLUDING FINAL LENGTHS.
2. REFER TO MOUNTING DETAILS ON DRAWINGS.

AIR HANDLING UNIT SCHEDULE

MARK	LOCATION	SERVING	UNIT COMPONENTS IN DIRECTION OF AIRFLOW (SEE LEGEND BELOW)	AIRFLOWS TOTAL CFM	AIRFLOWS OUTDOOR CFM	FAN DATA TYPE	FAN DATA ESP (IN. W.C.)	FAN DATA TSP (IN. W.C.)	FAN DATA RPM	FAN DATA BHP
AHU-5	MECHANICAL ROOM	AUDITORIUM	SEE DETAIL 4/M2.0	5,270	2,565	FC	2.25	3.6	1,799	4.6

MARK	COOLING COIL DATA												
	CAPACITY SENSIBLE (MBH)	CAPACITY TOTAL (MBH)	ROWS	FPF	FACE VEL. (FPM)	AIR DATA DB/WB TEMP. (°F) ENT.	AIR DATA DB/WB TEMP. (°F) LVG.	AIR P.D. (IN.W.G.)	WATER DATA TEMP. (°F) ENT.	WATER DATA TEMP. (°F) LVG.	FLOW (GPM)	WATER P.D. (FT. W.C.)	
AHU-5	184	267	6	125	426	84.7/69.1	53.1/52.8	0.59	44.0	54.0	53.2	0.6	

MARK	HEATING COIL DATA										
	CAPACITY TOTAL (MBH)	ROWS	FPF	AIR DATA TEMP. (°F) ENT.	AIR DATA TEMP. (°F) LVG.	FRICTION (IN.W.G.)	WATER DATA TEMP. (°F) ENT.	WATER DATA TEMP. (°F) LVG.	FLOW (GPM)	WATER P.D. (FT. W.C.)	
AHU-5	351	2	135	38.5	99.9	0.17	180.0	160.0	35.1	1.7	

MARK	ELECTRICAL DATA MOTOR HP	MOTOR VOLTS	MOTOR PH	STARTER/CONTROLLER TYPE	STARTER/CONTROLLER BY	STARTER/CONTROLLER LOCATION	MANUFACTURER	MODEL	REMARKS	MARK
AHU-5	7.5	460	3	VFD	SECTION 15900	MECH RM.	TRANE	M - 12	SEE NOTES	AHU-5

NOTES:
1. MAXIMUM COIL FACE VELOCITY OF AIR SHALL BE 500 FEET PER MINUTE (FPM).
2. WATER PRESSURE DROPS THROUGH CHILLED WATER COIL CONTROL VALVES SHALL NOT EXCEED 5 PSI.
3. MAXIMUM COIL TUBE VELOCITY OF WATER SHALL BE 5 FEET PER SECOND (FPS).
4. MIXING BOX MODULES SHALL BE PROVIDED WITH FILTER RACK AND 65% EFFICIENCY FILTERS.
5. PROVIDE ACCESS DOOR ON EACH MODULE, ALL ON THE SAME SIDE OF THE AHU, UNLESS NOTED OTHERWISE. ALL ACCESS DOORS SHALL OPEN AGAINST THE PRESSURE OF THE MODULE IN WHICH THEY ARE MOUNTED.

NORTH

REVISIONS

1 00-00-00	2 00-00-00
3 00-00-00	4 00-00-00

ARCHITECTS
ENGINEERS
PLANNERS

VEAZEY PARROTT DURKIN & SHOULDERS
8425 Woodfield Crossing Blvd.
Suite 155 E
Indianapolis, In 46240

Indiana University
ERNIE PYLE HALL
ROOM 220 RENOVATIONS - REBID
AS BUILT DRAWING DEC. 2005
Bloomington, Indiana

Drawing Title:
MECHANICAL FLOOR PLANS & SCHEDULES

THOMAS H. DURKIN
REGISTERED
No. 19257
STATE OF INDIANA
PROFESSIONAL ENGINEER

Project No: IU 20037951 VPDS 24030.10
Project Date: JUNE, 2005
CAD File Data
file name: 24030.20_M2-0.dwg
plot date: Jan 05, 2006-2:28pm

Drawing No: M2.0

ERNIE PYLE HALL – ROOM 220 RENOVATIONS – INDIANA UNIVERSITY, BLOOMINGTON